# Round 3 - Saturday, January 8, 2022

SHOTLINK

## Sentry Tournament of Champions

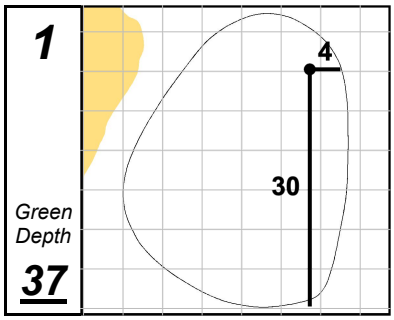


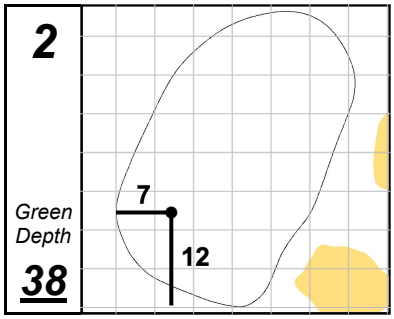


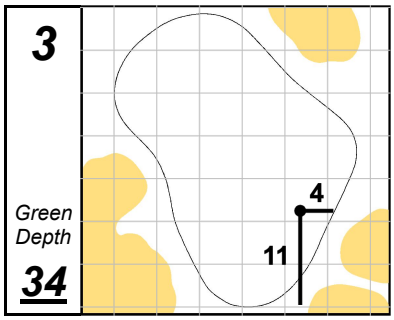


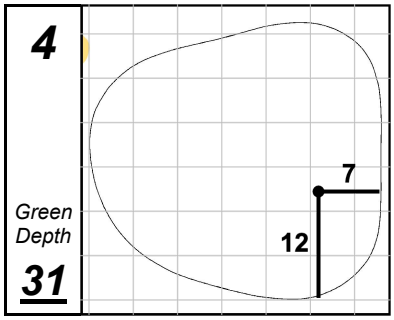


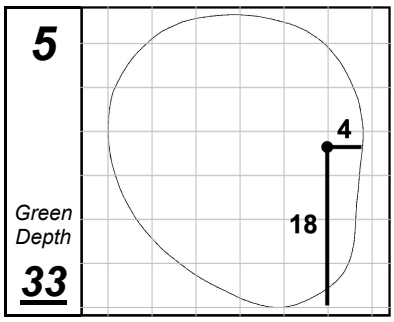


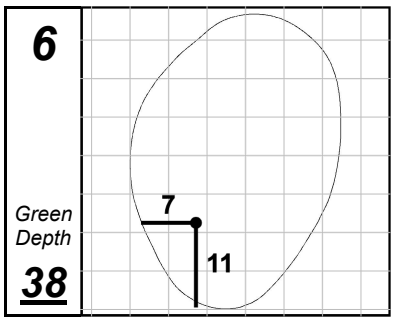


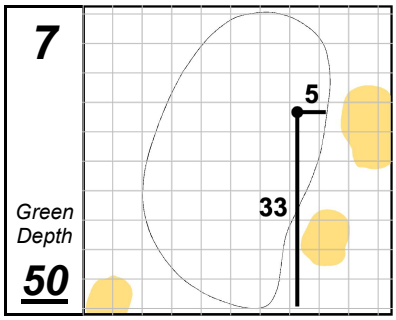


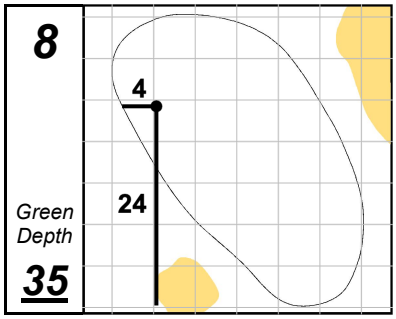


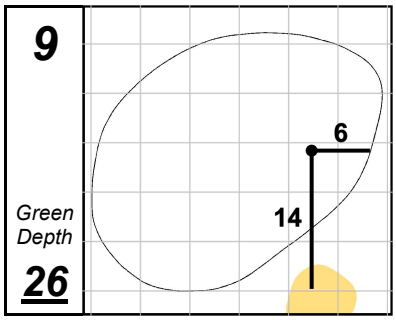


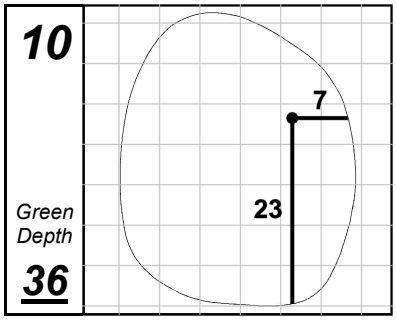


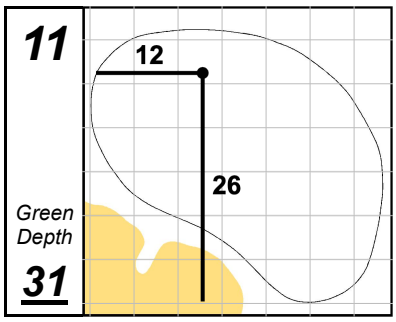


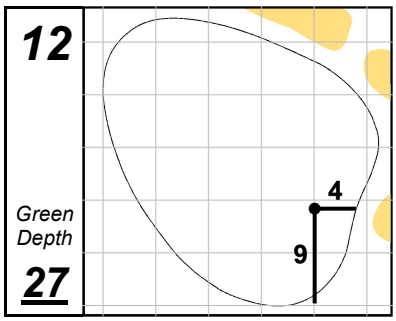


## Plantation Course at Kapalua

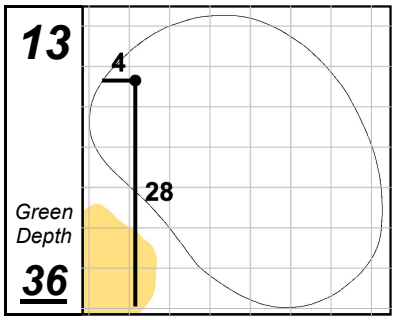


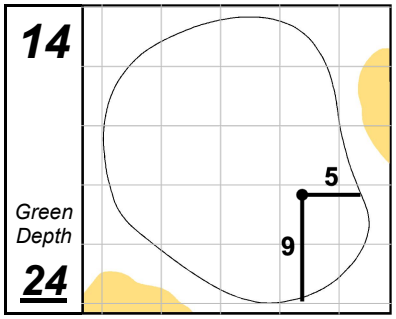


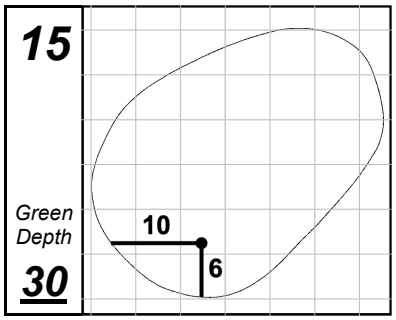


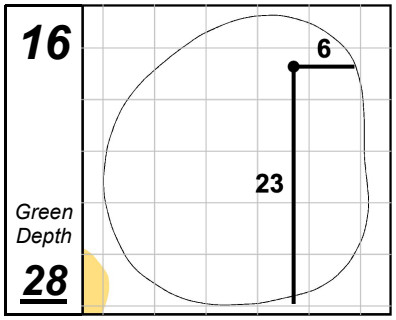


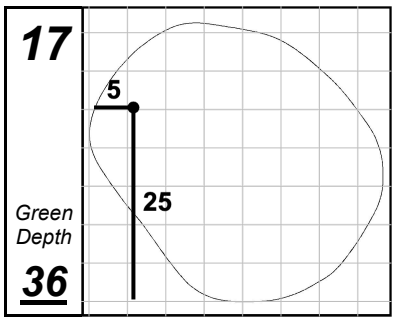


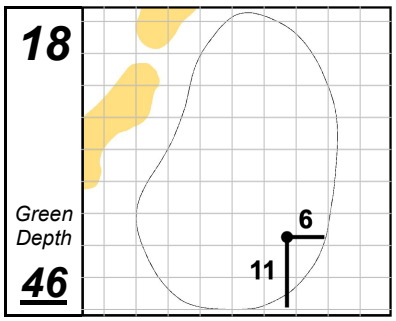


*Each side of a complete square on the green represents 5 YARDS.*

Friday, January 7, 2022 11:54:03 AM